Multiple-Channel A/D Conversion with a Single Sigma Delta Modulator

A. H. Tewfik, Y. Kim,
Univ. of Texas Austin
V. Gowreesunker
Texas Instruments, Dallas, Texas

THE UNIVERSITY OF TEXAS AT AUSTIN
UT ECE
ELECTRICAL & COMPUTER ENGINEERING

Overview

- Introduction
- Proposed approach
- Preliminary results

The Need

- Goals: Due to space or energy constraints, need to
  - Digitize multiple analog signals with one or a few A/D
  - Process multiple signals using one filter or amplifier

Source: techyglobe.com

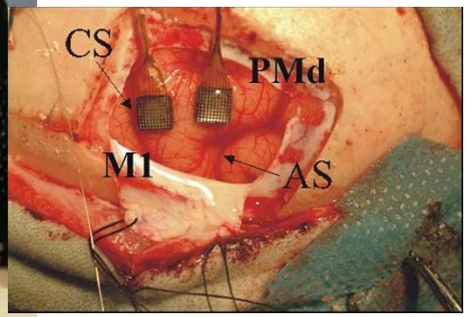

Source: medgadget.com

THE UNIVERSITY OF TEXAS AT AUSTIN
UT ECE
ELECTRICAL & COMPUTER ENGINEERING

Proposed Approach

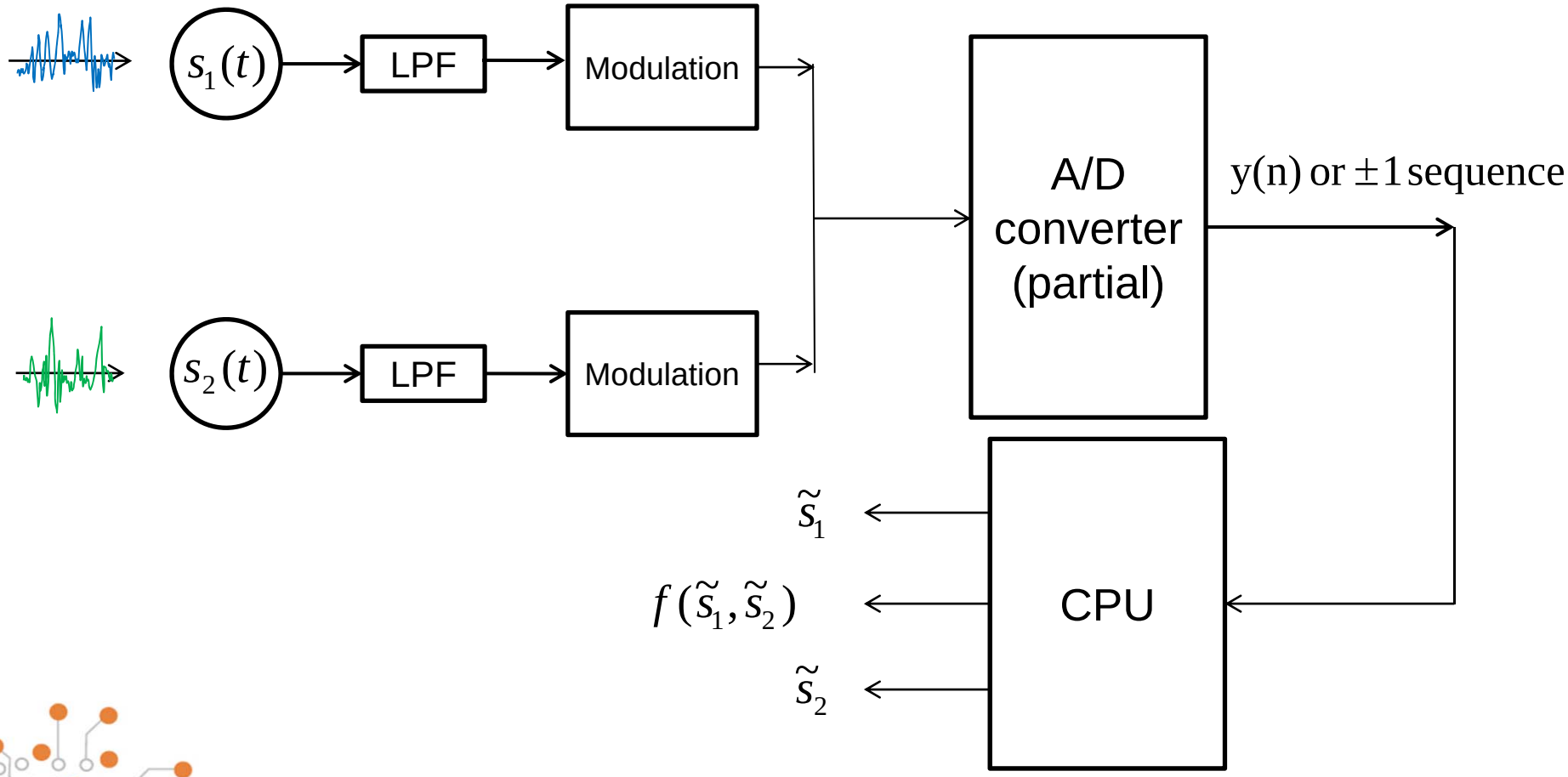

THE UNIVERSITY OF TEXAS AT AUSTIN
UT ECE
ELECTRICAL & COMPUTER ENGINEERING

Proposed Approach

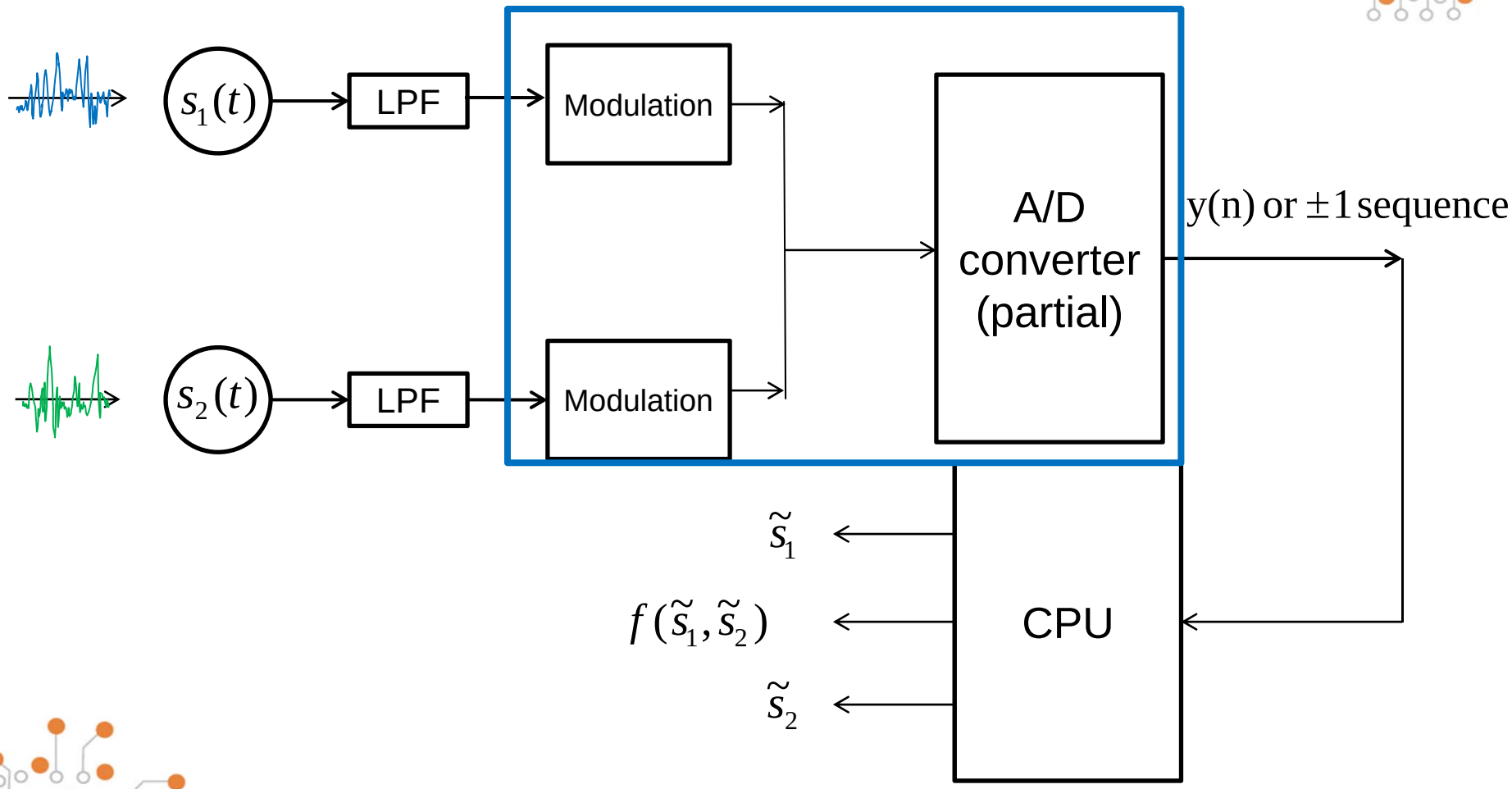

THE UNIVERSITY OF TEXAS AT AUSTIN
UT ECE
ELECTRICAL & COMPUTER ENGINEERING

Sparse Signal Example (Elad 2005)

Source

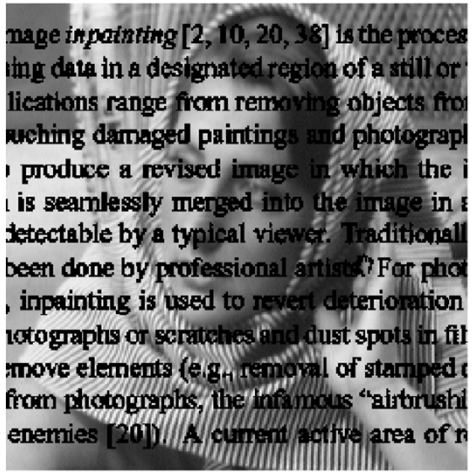

Outcome

predetermined dictionary:
Curvelet + DCT

Which System of Equations

- To solve for c:
  - Need at least as many equations as dimension of c
  - Rank of system = dimension of c
  - Numerically well conditioned

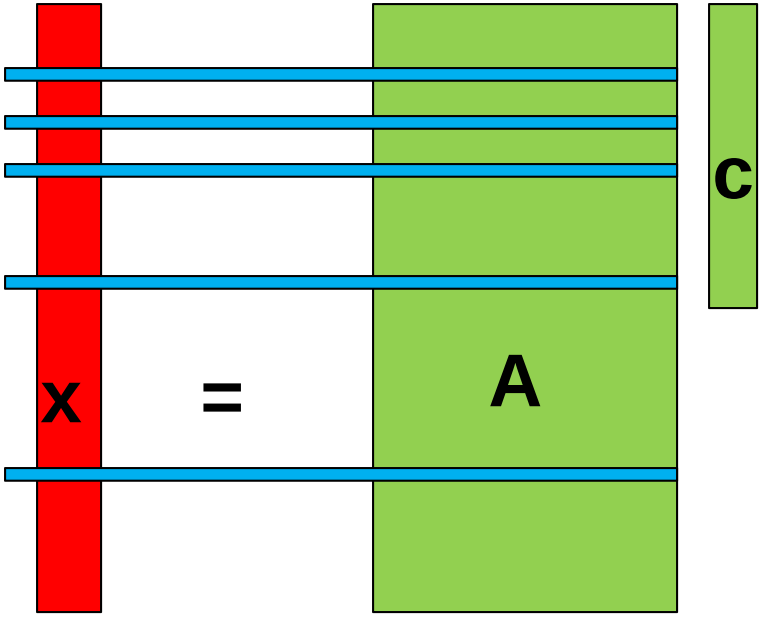

$$x = A\,c$$

The Value of Information

- For k sinusoids of unknown frequency need 2k+1 samples to reconstruct signal

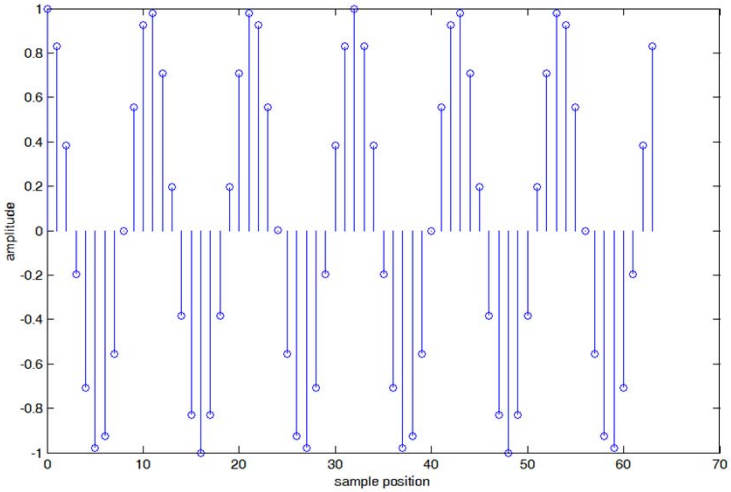

Time signal

Compressed Sensing in MRI

- Image reconstruction

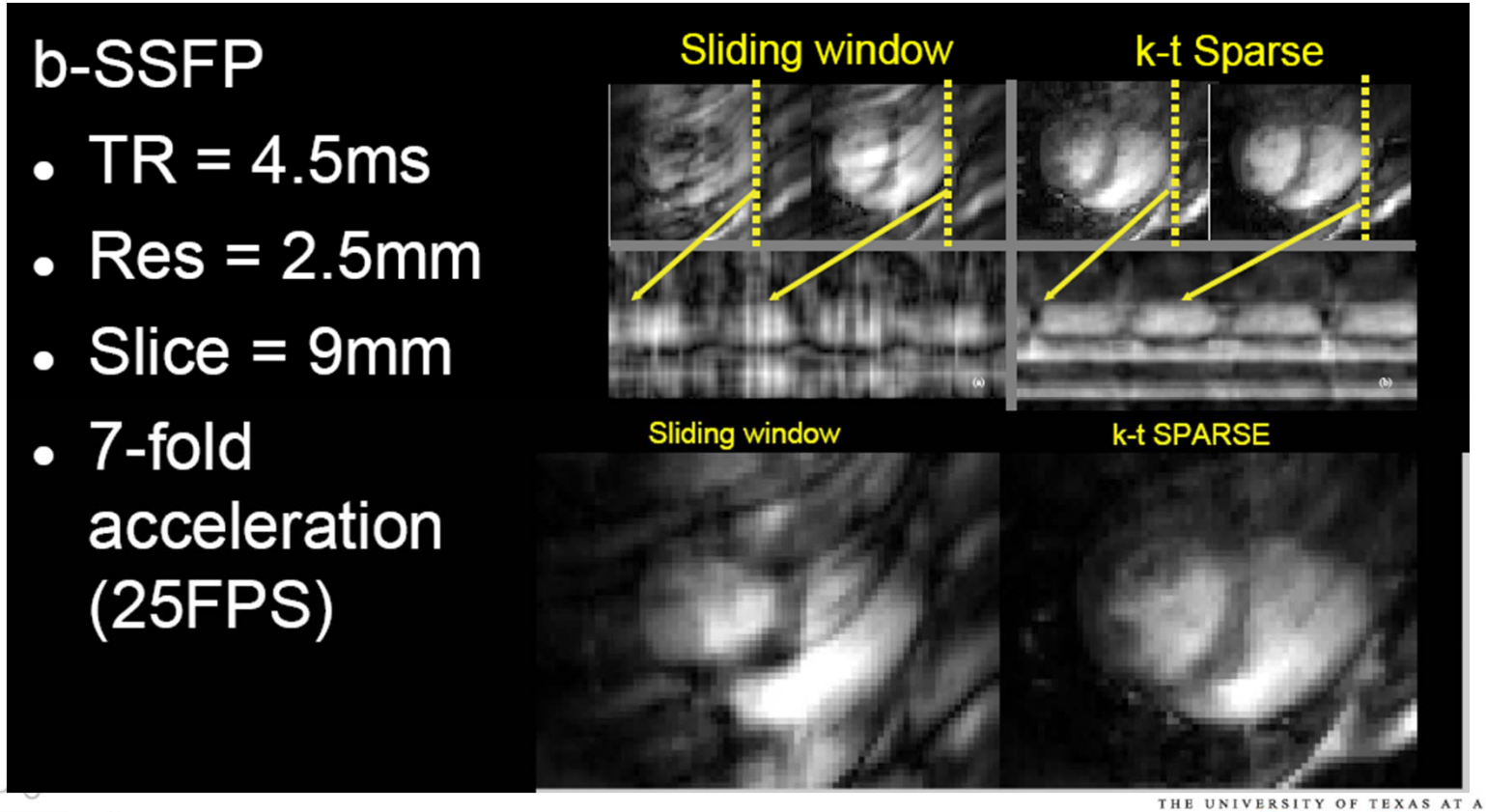

After Lustig et al 2005

Compressed Sensing: Which System of Equations

- To solve for c:
  - Need at least as many equations as dimension of c
  - Rank of system = dimension of c
  - Numerically well conditioned
  - *Needs to work regardless of position of non zero coefficients*

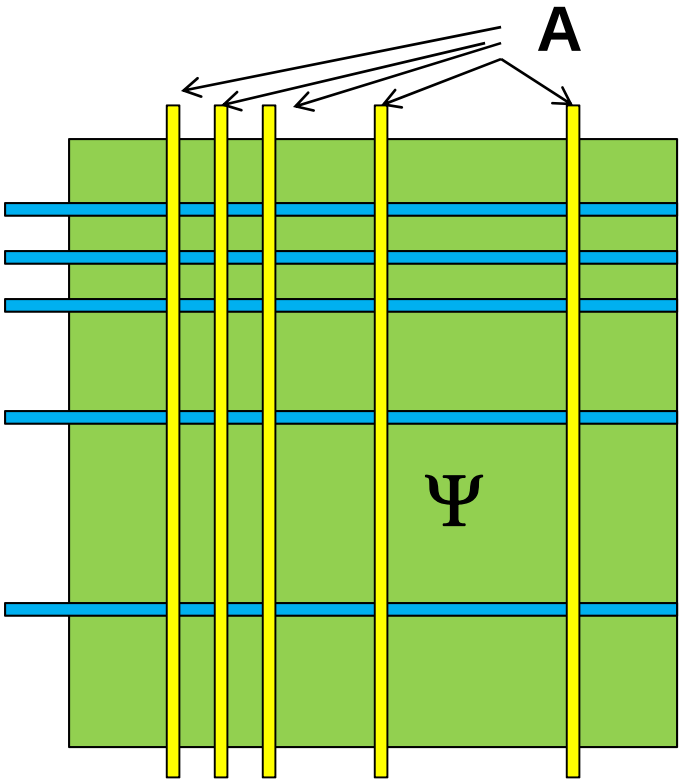

$$\mathbf{x} = \Psi\,\alpha$$

Restricted Isometry Property

- Technical condition
  - Restricted isometry property for measurement matrix
  - works as long as number of samples somewhat larger than sparseness of signal (number of components in signal)
  - Similar results for rank of random matrices

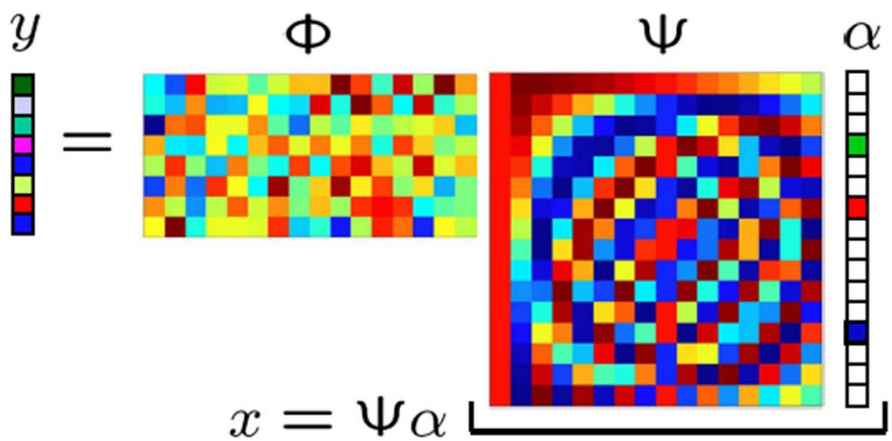

[Baraniuk et al 2008]

y; measured signal
Φ: measurement matrix
Ψ: basis
α: coefficients

THE UNIVERSITY OF TEXAS AT AUSTIN
UT ECE
ELECTRICAL & COMPUTER ENGINEERING

Solution

- “Slightly” expand bandwidth of signals before mixing
- Train dictionaries on signals from different branches

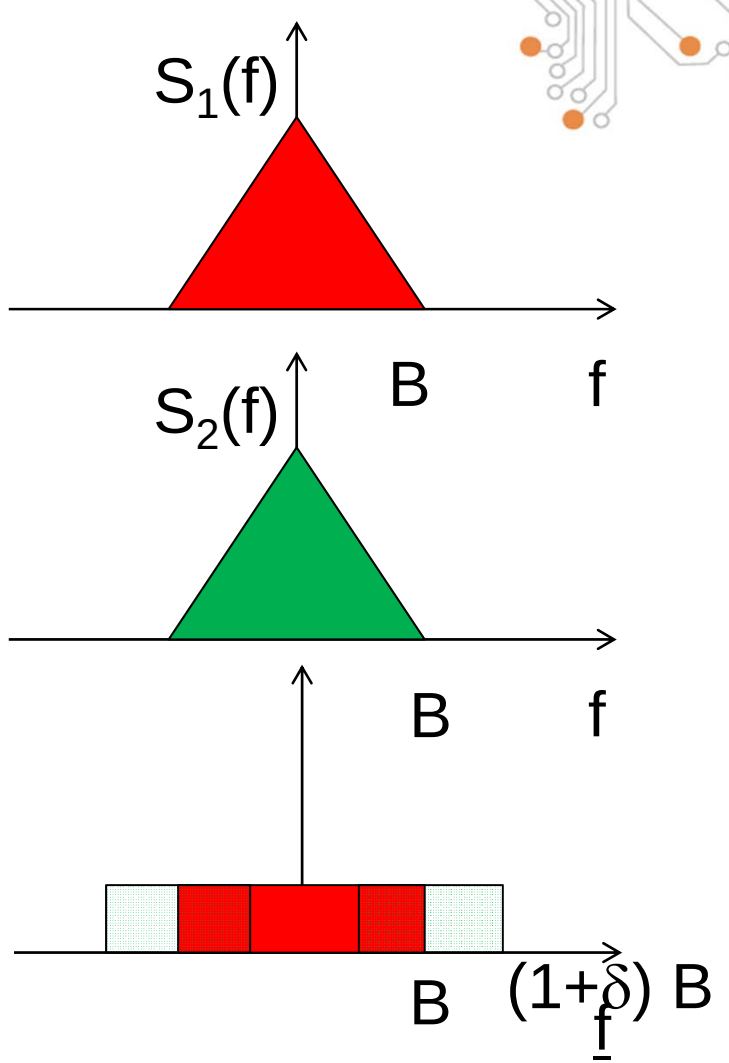

Proposed Approach

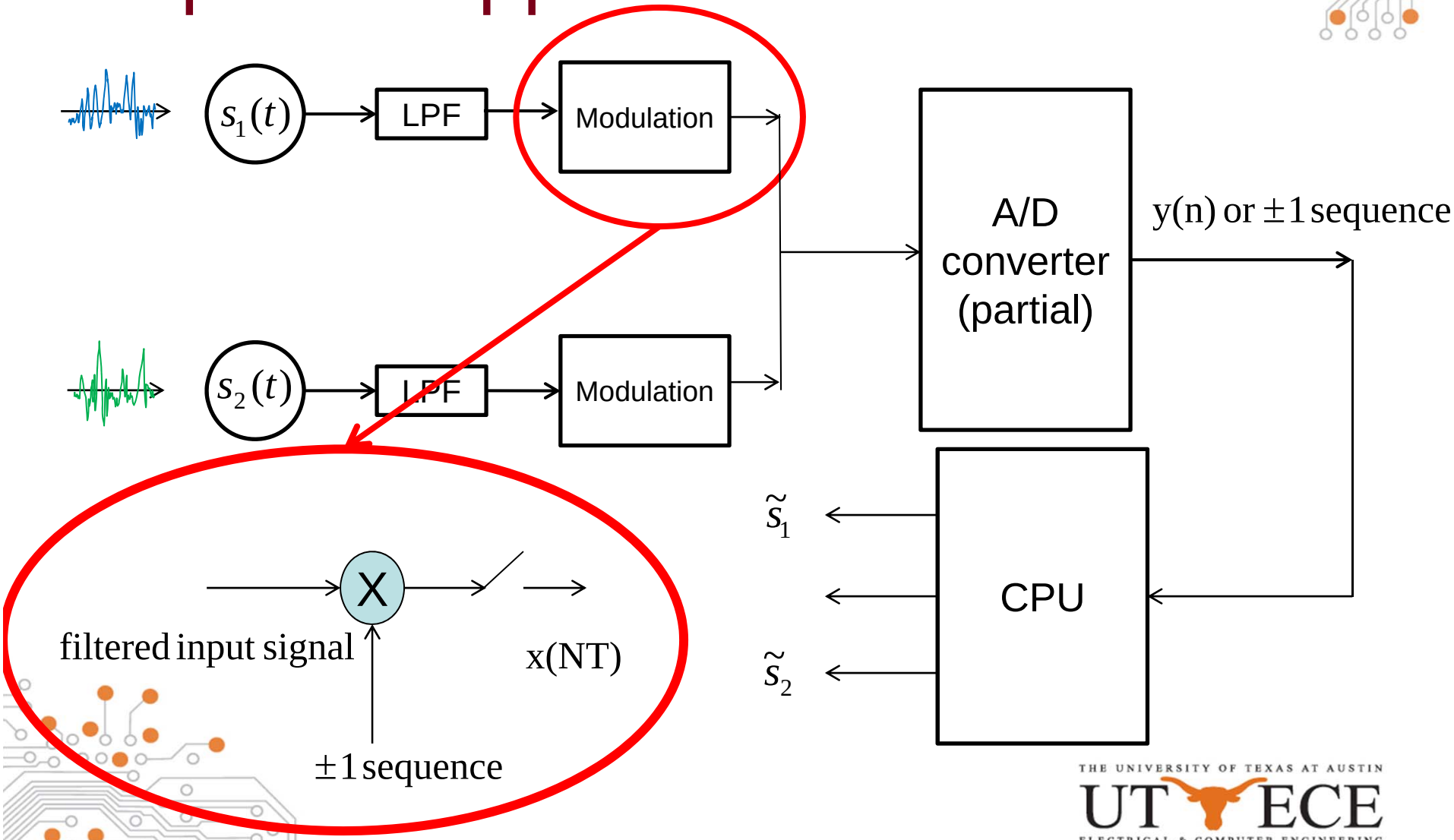

THE UNIVERSITY OF TEXAS AT AUSTIN
UT ECE
ELECTRICAL & COMPUTER ENGINEERING

Proposed Approach

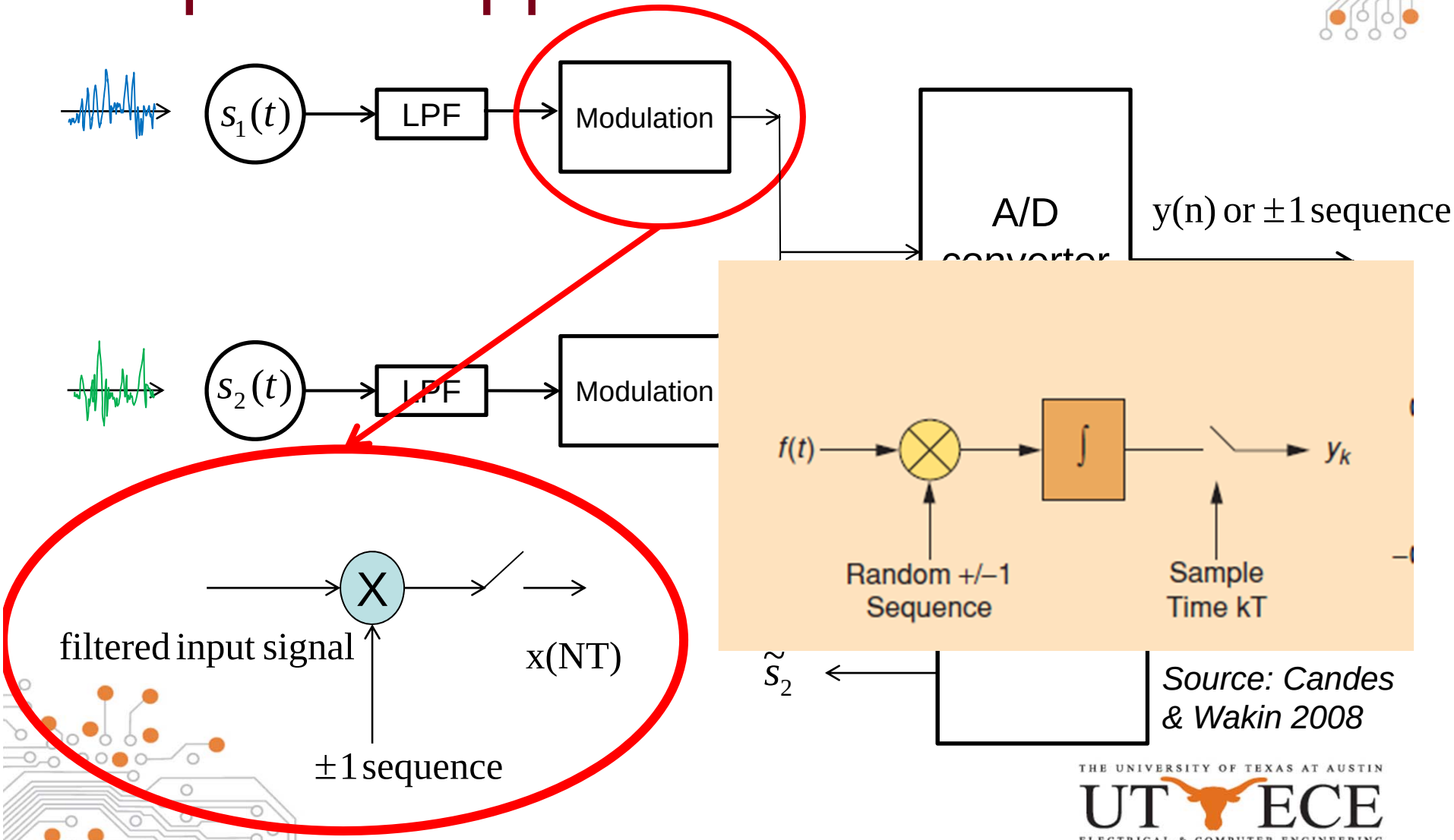

Source: Candes & Wakin 2008

THE UNIVERSITY OF TEXAS AT AUSTIN
UT ECE
ELECTRICAL & COMPUTER ENGINEERING

Proposed Approach

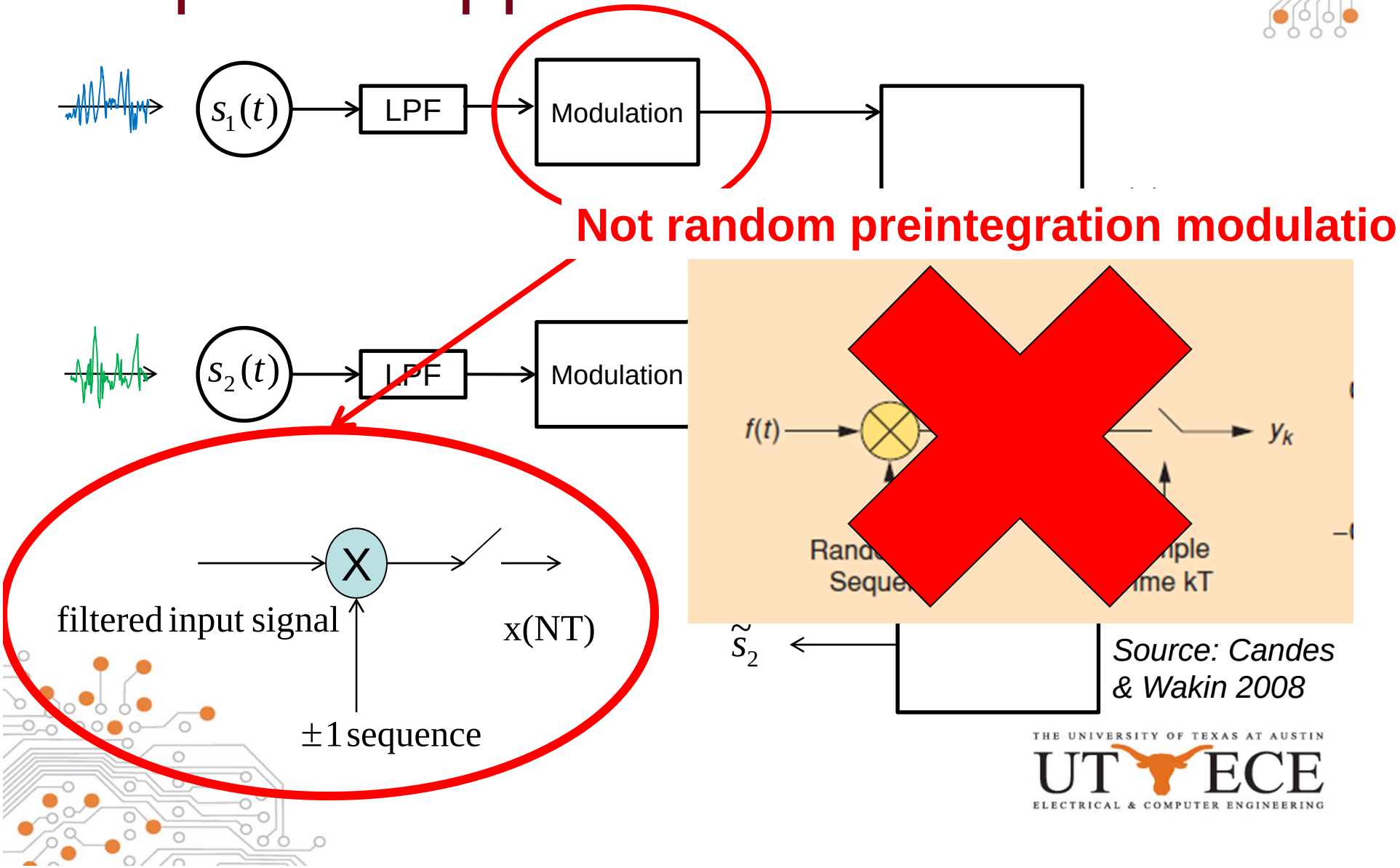

Source: Candes & Wakin 2008

THE UNIVERSITY OF TEXAS AT AUSTIN
UT ECE
ELECTRICAL & COMPUTER ENGINEERING

Proposed Approach

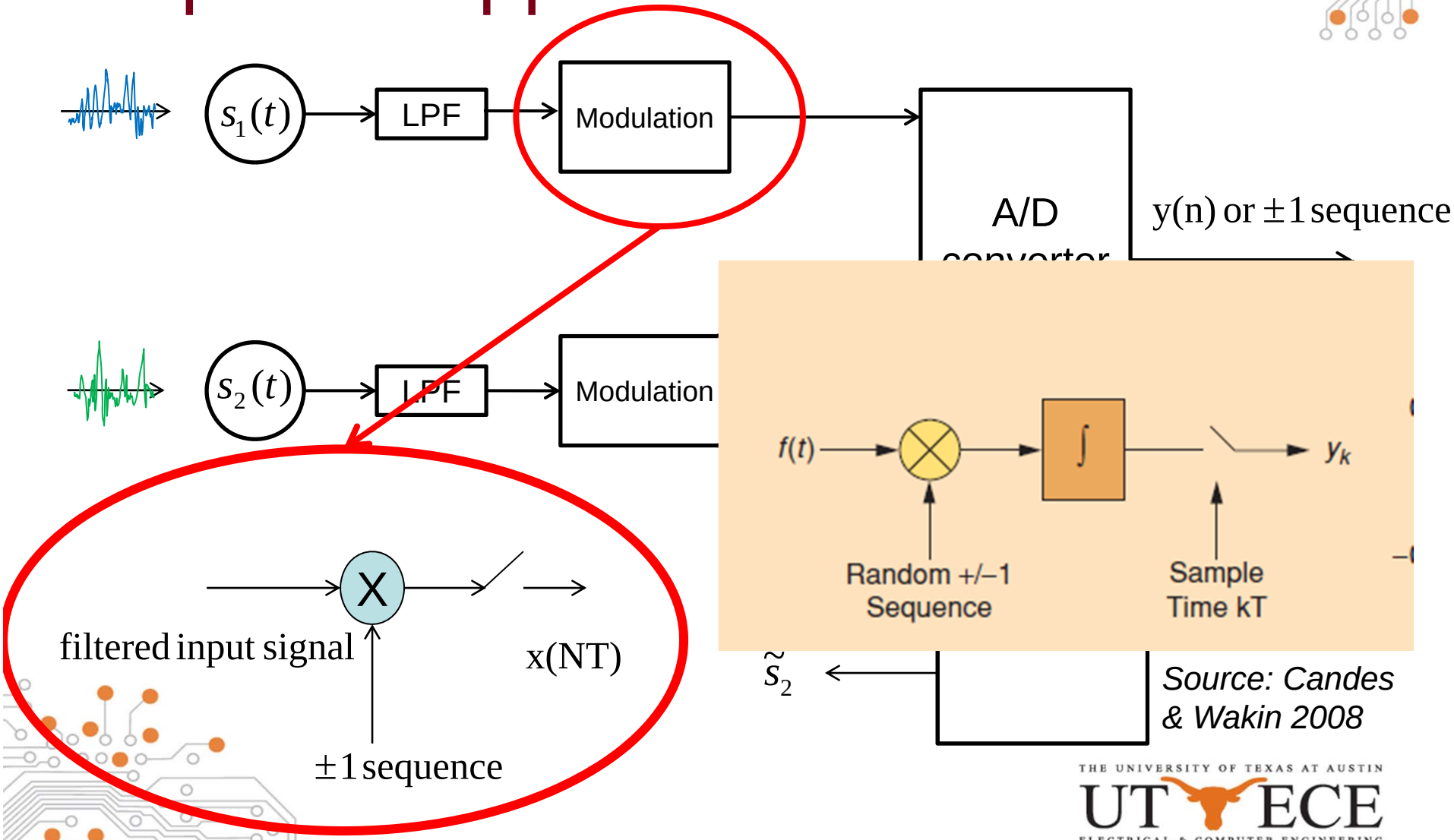

Source: Candes & Wakin 2008

THE UNIVERSITY OF TEXAS AT AUSTIN
UT ECE
ELECTRICAL & COMPUTER ENGINEERING

Proposed Approach

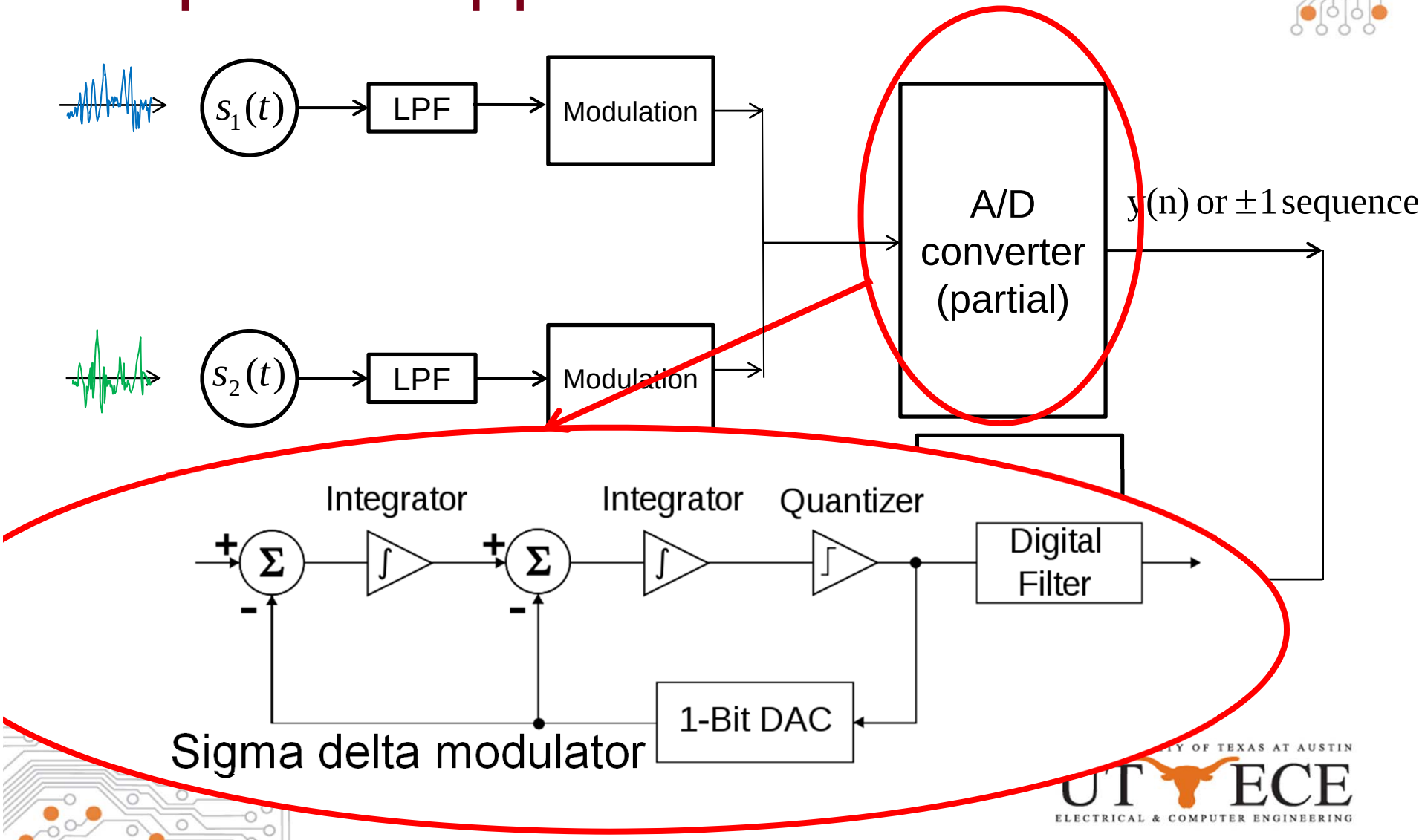

Switched Capacitor Filters

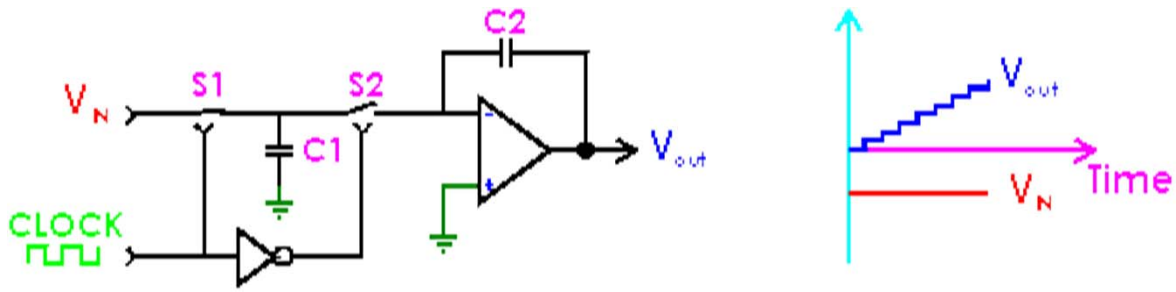

Switched capacitor summer $1/(1-z^{-1})$

$$Q = C_1V_1 = C_2V_2$$

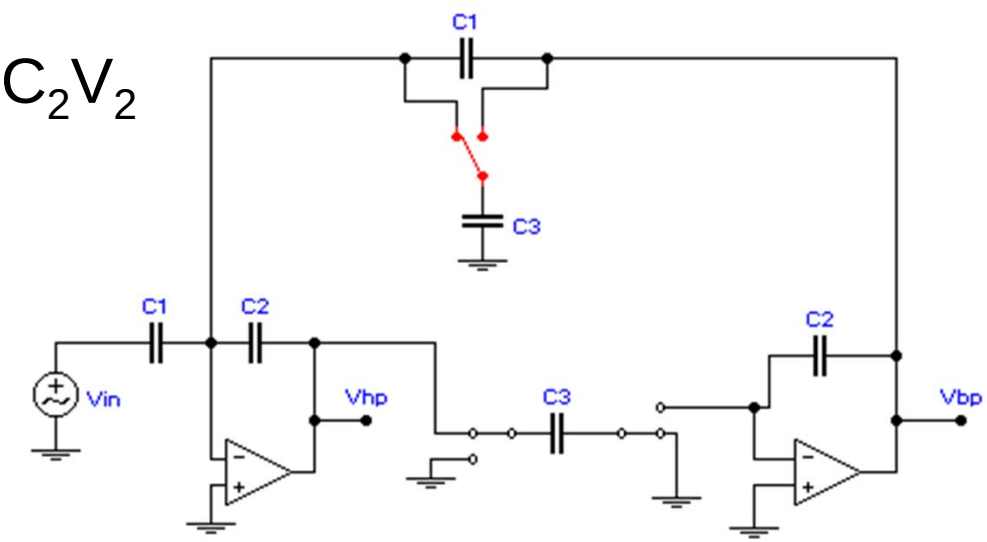

Switched bandpass filter

Source of figures:
W. Grise, MSU

THE UNIVERSITY OF TEXAS AT AUSTIN
UT ECE
ELECTRICAL & COMPUTER ENGINEERING

Problem Set-up

- Toy problem for exposition
  - Signal consists of K arbitrary sinusoids synchronized with sampling rate
    - Assumption not needed
  - Bandwidth expansion: Block processing of N > 2K sequential signal samples
    - Sinusoids drawn randomly from an N point (real or complex) DFT
      - Assumption not needed
    - Sequential processing possible
  - Noiseless case

Modulation Choices

- {±1} sequences:
  - Preserve sample power
  - Easy to implement
- Uniformly spread a sinusoid over DFT basis
  - Channel appears as "noise" to other channel
- Orthogonal sequences

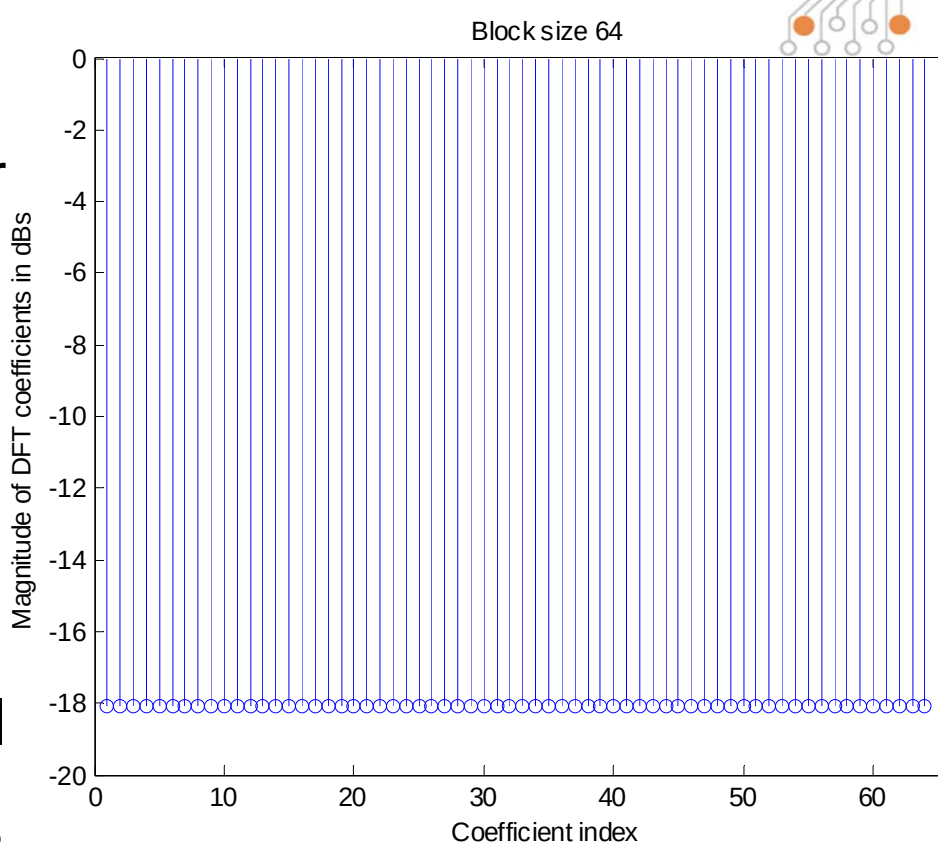

Kasami Sequences

- Binary periodic sequences of period $2^N - 1$, where N = even integer.
- Cross-correlation values close to Welch lower bound
- $2^{N/2}$ different sequences

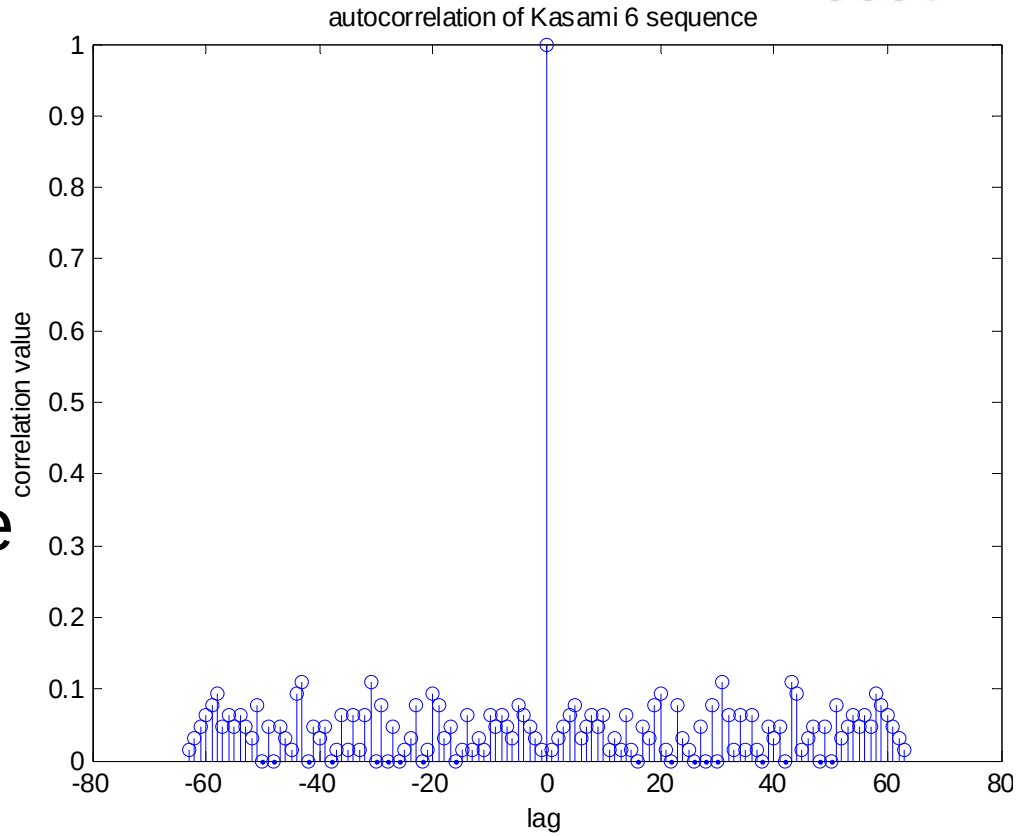

THE UNIVERSITY OF TEXAS AT AUSTIN
UT ECE
ELECTRICAL & COMPUTER ENGINEERING

Signal Reconstruction

- Oracle: given position of signal frequencies, perfect reconstruction possible
- Sparse reconstruction approach: greedy, L_1, re-weighted L_1, lasso, etc.
  - Limited by performance of algorithm
- Special techniques matched to signal structure:
  - Exploit properties of sinusoids and Kasami sequences

SPARS'11

- Main themes:
  - Analysis vs. synthesis sparse models
    - $x=Ac$ with c sparse vs. $W^T x$ sparse where W is a tight frame
  - Applications: classification, clustering, imaging, PCA, …
  - Dictionary learning
  - Optimality results in compressed sensing

Sparse Signal Reconstruction

- Greedy methods
  - "Orthogonal least squares"
    - Select dictionary entry most correlated with current signal residual
    - Update residual and decorrelate remaining dictionary entries from selected one.
  - L_1 methods
    - Lasso type

$$\text{minimize}_c \ \|Ac - x\|_2 + \lambda \|c\|_1$$

    - Reweighted L_1

$$\text{minimize}_c \ \|w^T c\|_1 + \lambda \, \|Ac - x\|_2 \quad , w_i \propto 1/|c_i|$$

Exploit Signal Structure

- Assume same frequency content in both channels
  - Mixture superposition of signals
    - $s(n) = \alpha W^n + \beta k(n) W^n,$
      - $W = \exp\left(\frac{j2\pi}{N}\right), k(n+M) = k(n)$
    - $s(n+M) = s(n)W^M$
  - SVD of mixture matrix $[\vec{y}(n)]$ yields two signal components using generalization of MUSIC type algorithms
    - $,\vec{y}(n)^T = [y(n) \quad \cdots \quad y(n+M-1)]$

Examples:

1 sinusoid,2 components, identical frequencies in both channels

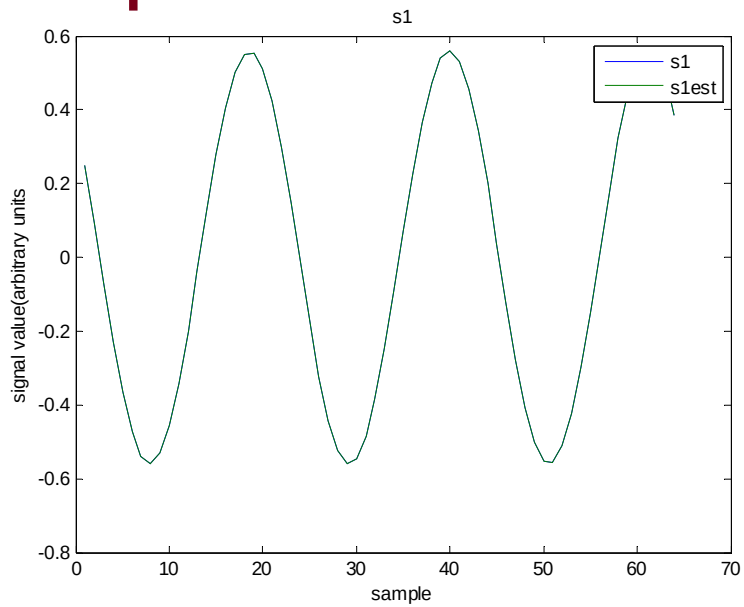

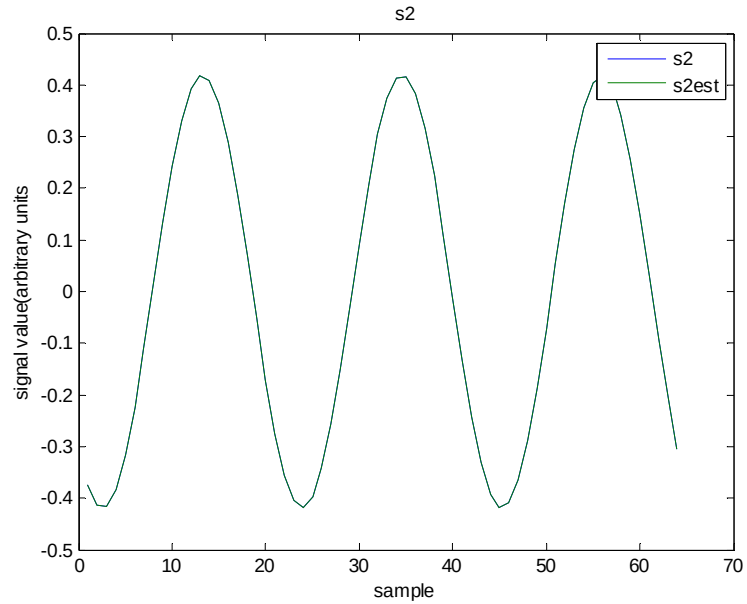

15.9 dB signal

2.49 dB signal

Reconstruction via L_1 regularized LS, λ =.1; rel_tol=1e-5

THE UNIVERSITY OF TEXAS AT AUSTIN
UT ECE
ELECTRICAL & COMPUTER ENGINEERING

Examples:

6 components, identical frequencies in both channels

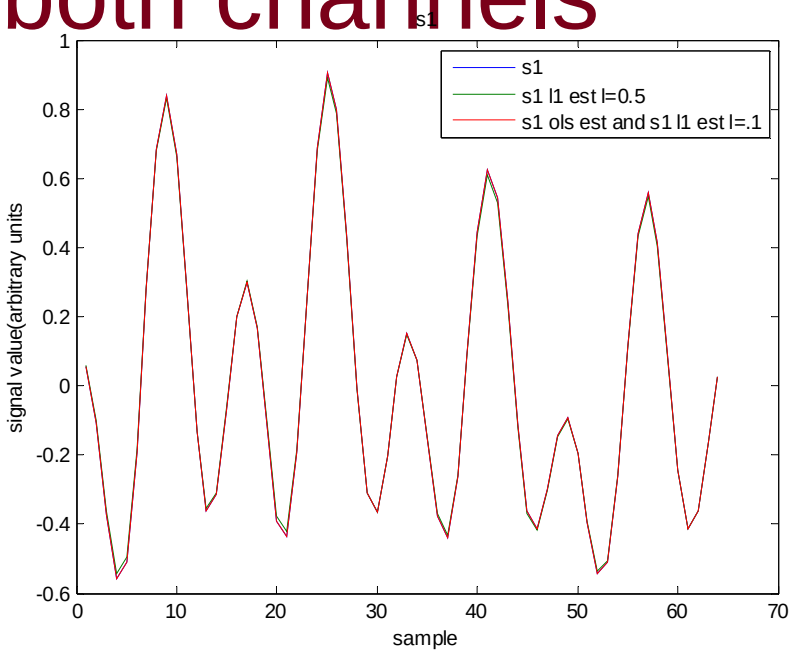

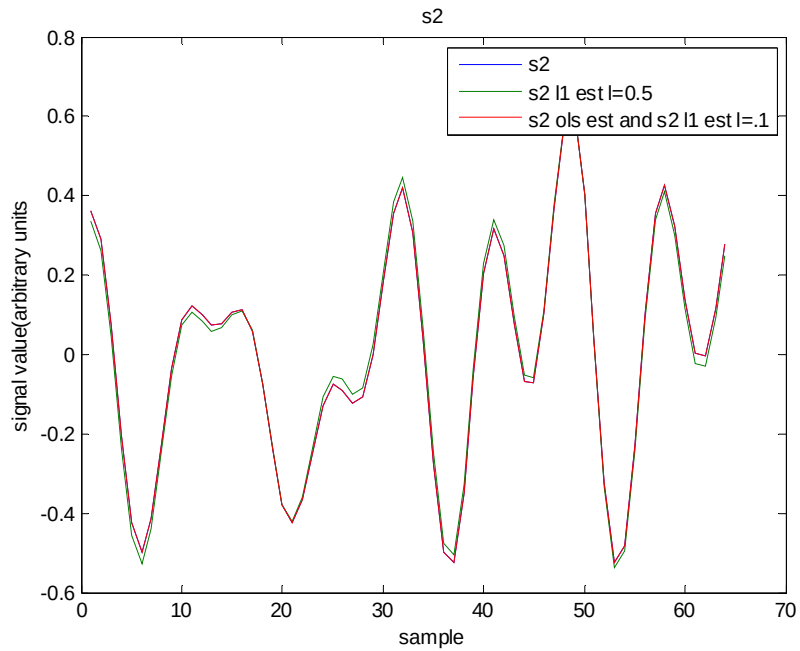

10.98 dB signal

λ =.5 SNR_{recon} 34.4 dB

-2.3 dB signal

λ =.5 SNR_{recon} 23.3 dB

Reconstruction via L_1 regularized LS; rel_tol=1e-4

THE UNIVERSITY OF TEXAS AT AUSTIN
UT ECE
ELECTRICAL & COMPUTER ENGINEERING

Audio Example

Input Signals

fs1.wav

$s_1(t)$

$s_2(t)$

fs2.wav

x_mix.wav

Separated Sources

s1_est.wav

$\hat{s}_1(t)$

$\hat{s}_2(t)$

s2_est.wav

- 3 KHz speech, 1.2 bandwidth expansion factor,
- Observed SIR and SAR in 40-60 dB range

Conclusion

- Sparse reconstruction theory may lead to practical “sharing” of A/Ds amongst multiple arbitrary but “sparse” analog channels
- Many questions remain to be answered, e.g.
  - Quantify required increase in bandwidth for perfect separation, desired bit resolution and target SNR,…
  - Block vs serial processing and latency